CERALINE

Ideal Standard

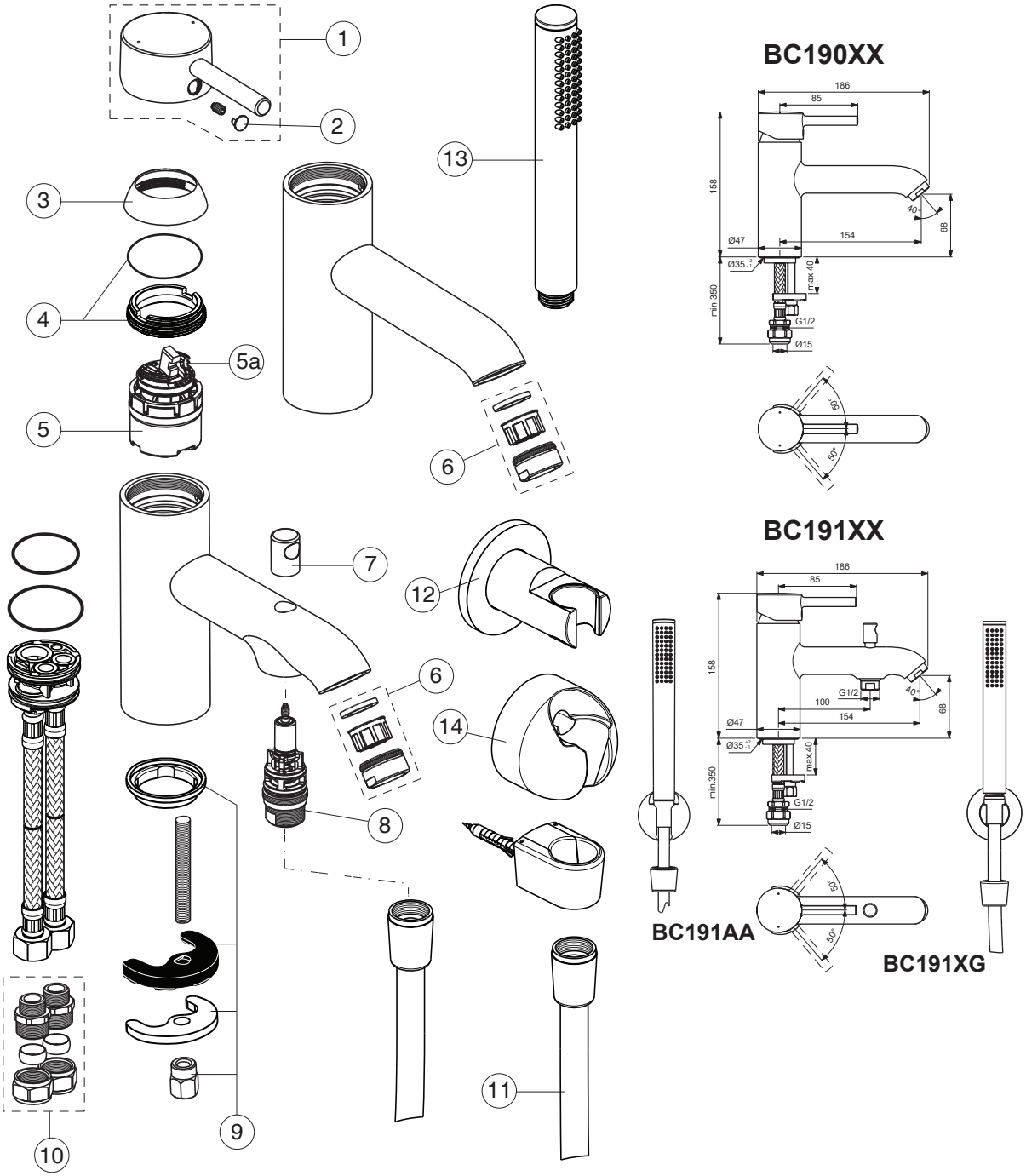

For XX=Coverage-Designate:
AA=chrome,XG=silk black

For Instance:
B961521AA for chrome

Pos.	Signify	Spare parts-Nr.	Quantity	Pos.	Signify	Spare parts-Nr.	Quantity
1	Lever,w/logo-set	B961521XX	1 Pcs.	13	Handspray	BC774XX	1 Pcs.
2	Cap decorative	B960473AA	1 Pcs.	14	Wall bracket fixed	B9467AA	1 Pcs.
3	Rosette M38x1.5	B961373XX	1 Pcs.				
4	Screw M41x1.5/M38x1.5	B961374NU	1 Pcs.				
5	Cartridge Ø38mm	A861156NU*	1 Pcs.				
5a	Hot limit stop	A861181NU	1 Pcs.				
6	Nozzle	A961625XX	1 Pcs.				
7	Pull knob	B960486XX	1 Pcs.				
8	Diverter automatic	B960169XX	1 Pcs.				
9	Connecting set	A964520NU	1 Set				
10	Connector G3/8,Ø15	B960845NU	1 Set				
11	Flexible hose G1/2 /L1800	A963173NU	1 Pcs. (for BC191AA)				
	Flexible hose G1/2 /L1750	A4109XX	1 Pcs.				
12	Wall bracket	BC806XX	1 Pcs.				

**Universal set (not all parts needed)*